NOTES:

1. PLACEMENT ON A LEVEL SURFACE FREE OF OBSTRUCTIONS (INCLUDING SNOW, FOR WINTER OPERATION) OR AIR RECIRCULATION ENSURES RATED PERFORMANCE, RELIABLE OPERATION AND EASE OF MAINTENANCE. SITE RESTRICTIONS MAY COMPROMISE MINIMUM CLEARANCES INDICATED BELOW, RESULTING IN UNPREDICTABLE AIR FLOW PATTERNS AND POSSIBLE DIMINISHED PERFORMANCE. YORK'S UNIT CONTROLS WILL OPTIMIZE OPERATION WITHOUT NUISANCE HIGH PRESSURE SAFETY CUTOUT; HOWEVER, THE SYSTEM DESIGNER MUST CONSIDER POTENTIAL PERFORMANCE DEGRADATION. RECOMMENDED MINUMUM CLEARANCES: COIL SIDE - 2m COMPRESSOR SIDE - 1.2m; CONTROL SIDE - 2m; TOP - NO OBSTRUCTIONS ALLOWED; DISTANCE BETWEEN ADJACENT UNITS - 3m. NO MORE THEN ONE ADJACENT WALL MAY BE HIGHER THEN THE UNIT.
2. WEIGHTS (KG):SHIPPING - 5,100, OPERATING - 5,400
3. CENTER OF GRAVITY FROM ORIGIN: X= 3191.4, Y= 1318.1 .
4. INSTALLING CONTRACTOR MUST INCLUDE VENT AND DRAIN ACCOMODATIONS IN CHILLED WATER PIPING NEAR THE EVAPORATOR.

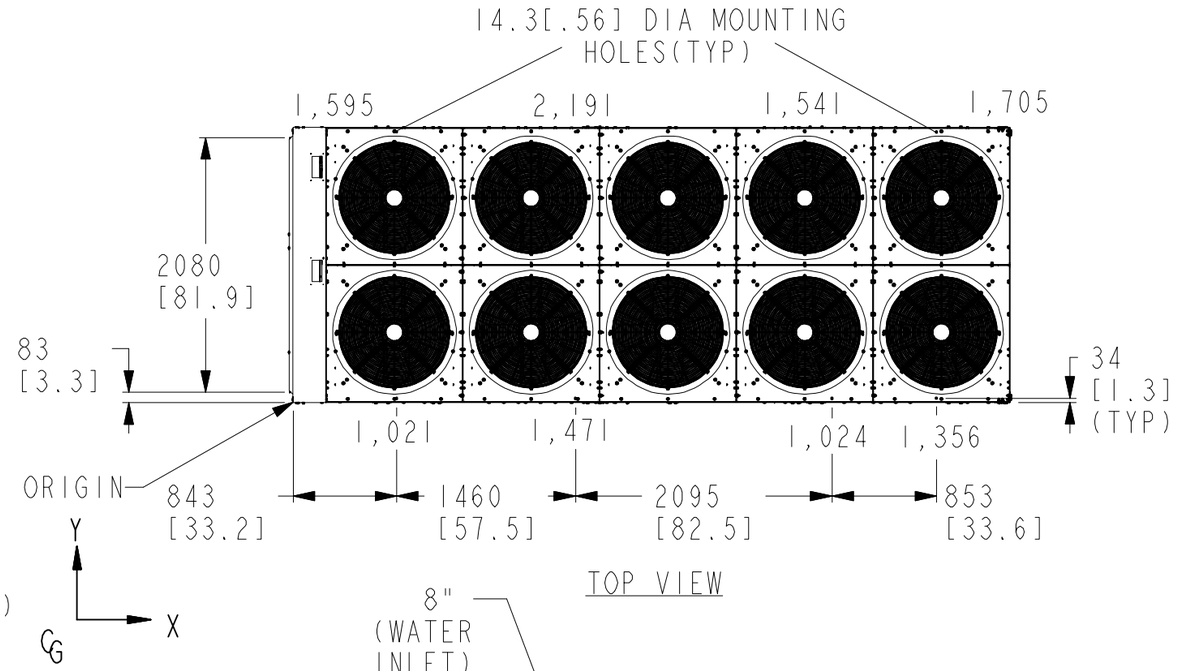

TOP VIEW

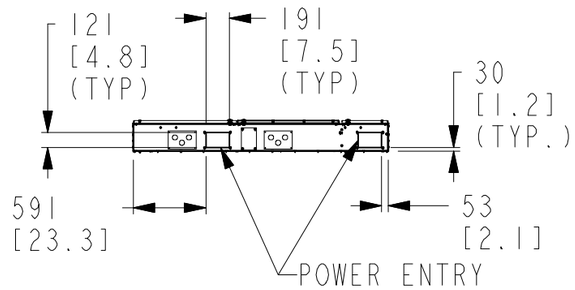

BOTTOM OF PANEL

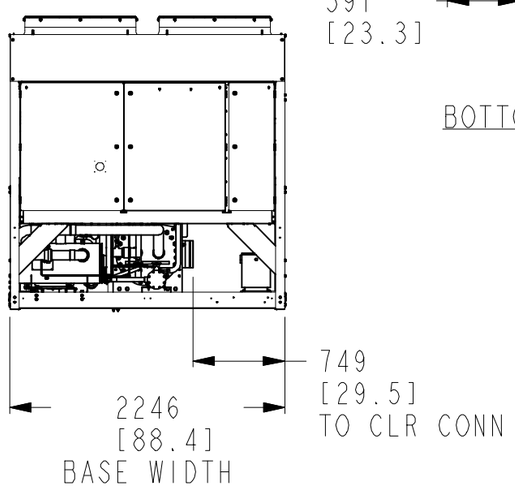

FRONT VIEW

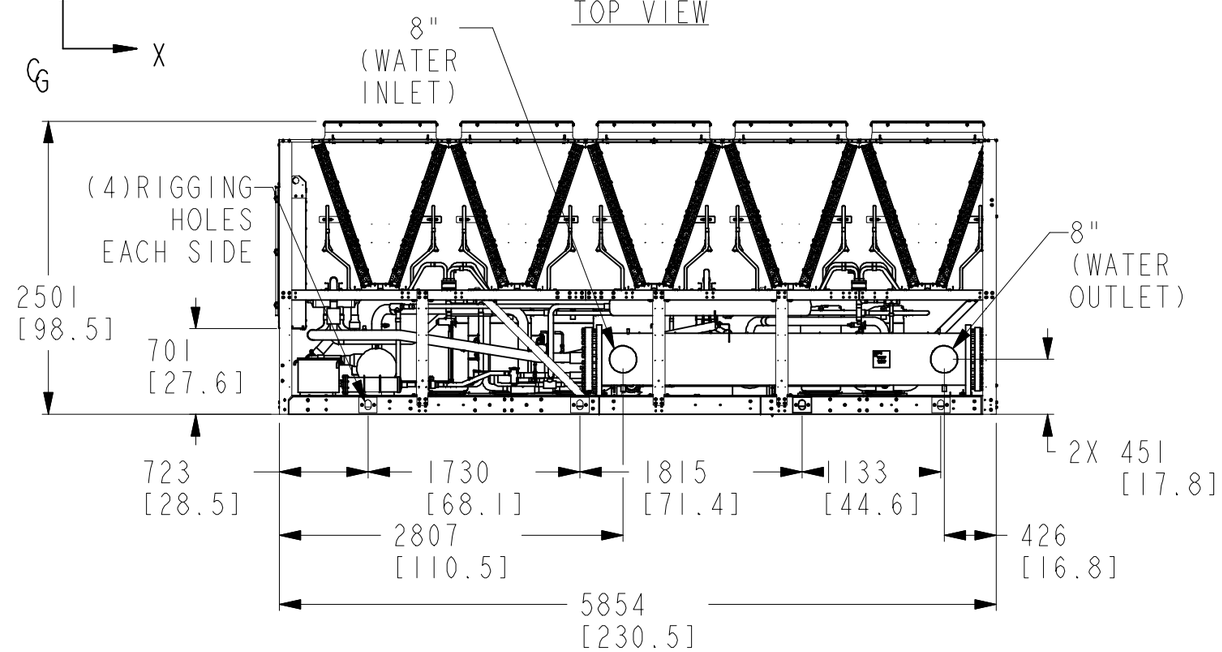

RIGHT VIEW

THIRD ANGLE

Johnson Controls

JOHNSON CONTROLS - BUILDING EFFICIENCY

507 EAST MICHIGAN STREET, MILWAUKEE, WI, 53202 USA

REVISION	REV.	DATE	EC. NO.	DR.	CHK.	ENG.
	-		DX10-0324			
	NEW					

"ALL PROPRIETARY RIGHTS IN THE SUBJECT MATTER HEREOF ARE RESERVED AND NO PERMISSION IS GRANTED TO REPRODUCE THIS PRINT IN WHOLE OR IN ANY PART, OR DISCLOSE ANY OF THE INFORMATION UPON IT TO OTHERS WITHOUT WRITTEN RELEASE BY JOHNSON CONTROLS INCORPORATED"

DO NOT SCALE UNLESS OTHERWISE SPECIFIED, DIMENSIONS ARE IN MILLIMETERS

DRAWN	H.S.CHEN	10-SEP-2010
MODELER	H.S.CHEN	10-SEP-2010
CHKD	Y.ZHANG	10-SEP-2010
ENG		

SCALE: 0.091 MASS (kg): SEE ABOVE

PRODUCT DRAWING
0425HE CE
YLPA

MATERIAL
ENG. STD.
PART NO.
CUT SIZE

A3	CAGE NUMBER	DRAWING NUMBER	REVISION
	66935	075-94325-104	-
			VERSION 0
ORIG. NO.:		SHEET 1 OF 1	RELEASED