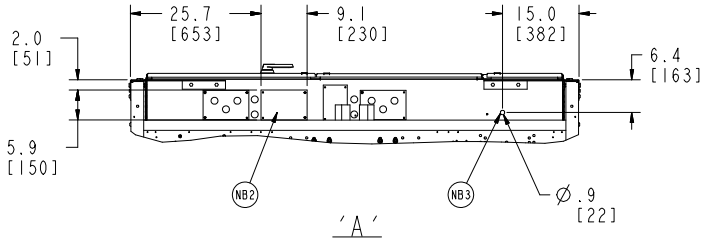

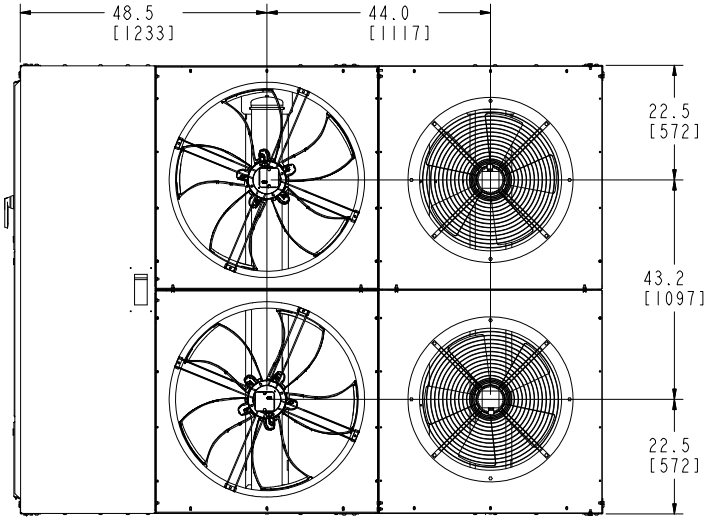

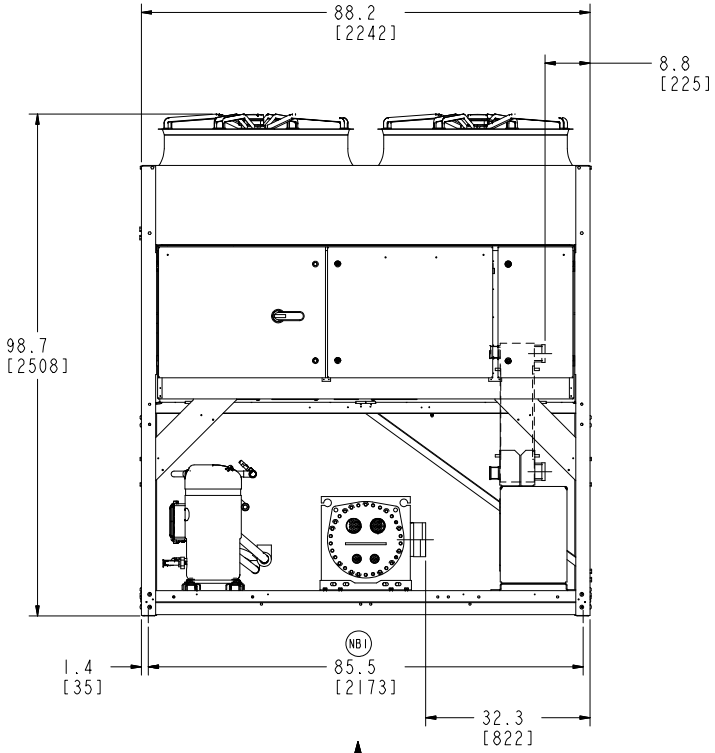

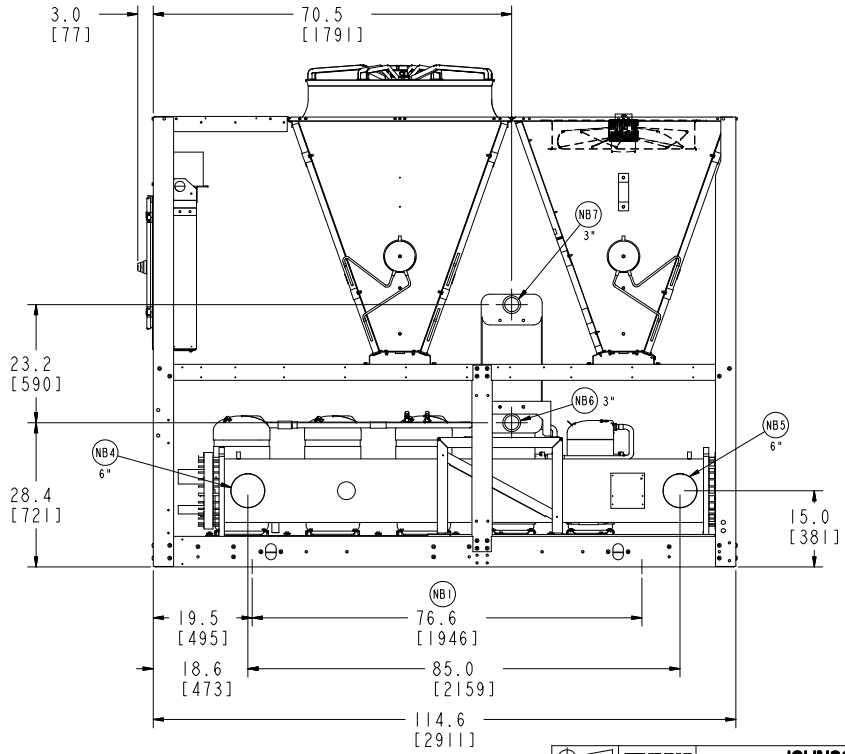

YLAA 0195HE

REV	DATE	REVISION RECORD	EC. NO.	DR.	CHK.	ENG.
A	30-JUL-2009	H/R PHX WATER CONNECTIONS WERE FLANGES	DX09-0315	GT	-	TC

"ALL PROPRIETARY RIGHTS IN THE SUBJECT MATTER HEREOF ARE RESERVED AND NO PERMISSION IS GRANTED TO REPRODUCE THIS PRINT IN WHOLE OR IN ANY PART, OR DISCLOSE ANY OF THE INFORMATION UPON IT TO OTHERS WITHOUT WRITTEN RELEASE BY YORK INTERNATIONAL CORPORATION"

DIMENSIONS ARE IN MM
DO NOT SCALE
TOLERANCES PER ED0022
WELDING PER WELD INDEX

DRAWN	G TURNER	06-NOV-2008
MODELER	G TURNER	06-NOV-2008
CHKD	-	-
ENG	T COLEMAN	06-NOV-2008

SCALE : .075 | WEIGHT : .000 KG

THIRD ANGLE

YORK BY JOHNSON CONTROLS

JOHNSON CONTROLS
MAYNE HOUSE, FENTON WAY, BASILDON, ESSEX, SS15 6RZ. UK.

PRODUCT DRAWING
YLAA 0195HE
-
-

MATERIAL -
ENG. STD. -
PART NO. -

A1 | CAGE NUMBER XXXXX | DRAWING NUMBER 035-22323-000 | REVISION A | VERSION b

ORIG. NO. | SHEET: 1 OF 1 | RELEASED